OUTLINES AND DIMENSIONS

MSZ-GE25VA MSZ-GE35VA MSZ-GE50VA

Unit: mm

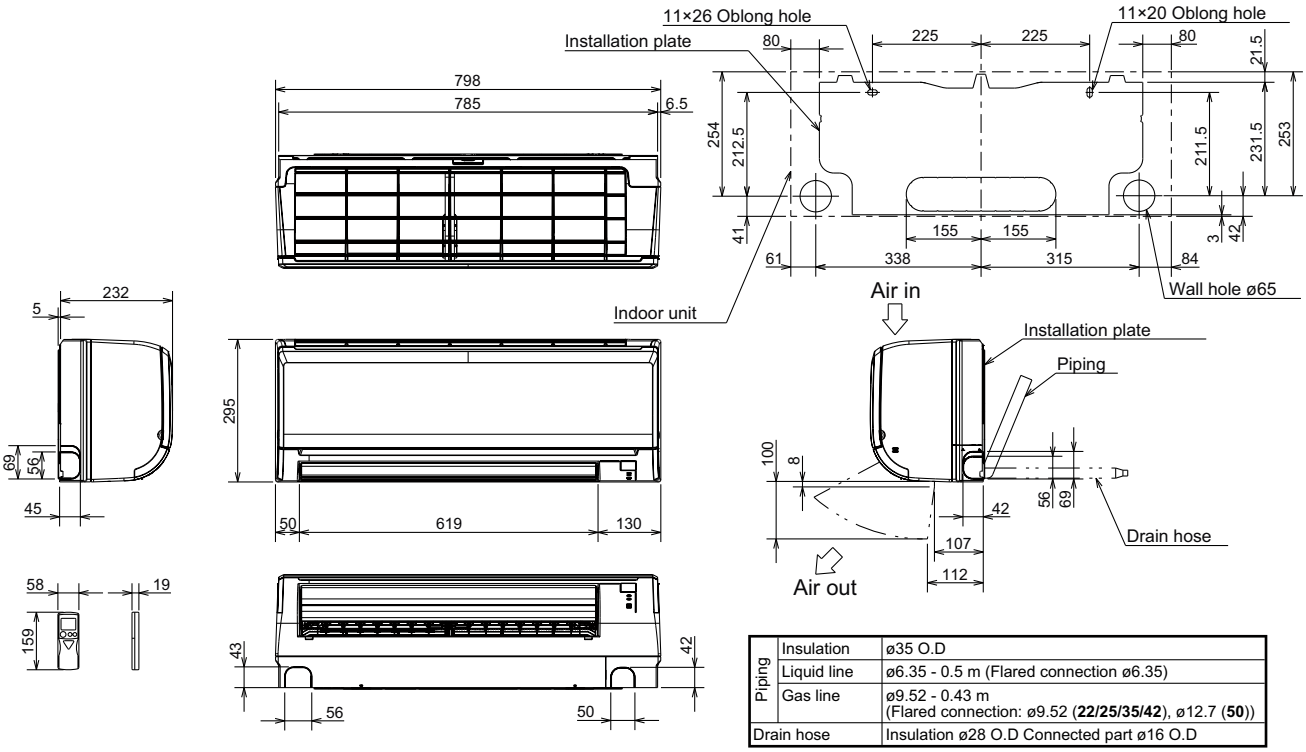

Piping	Insulation	ø35 O.D
	Liquid line	ø6.35 - 0.5 m (Flared connection ø6.35)
	Gas line	ø9.52 - 0.43 m (Flared connection: ø9.52 (**22/25/35/42**), ø12.7 (**50**))
Drain hose		Insulation ø28 O.D Connected part ø16 O.D